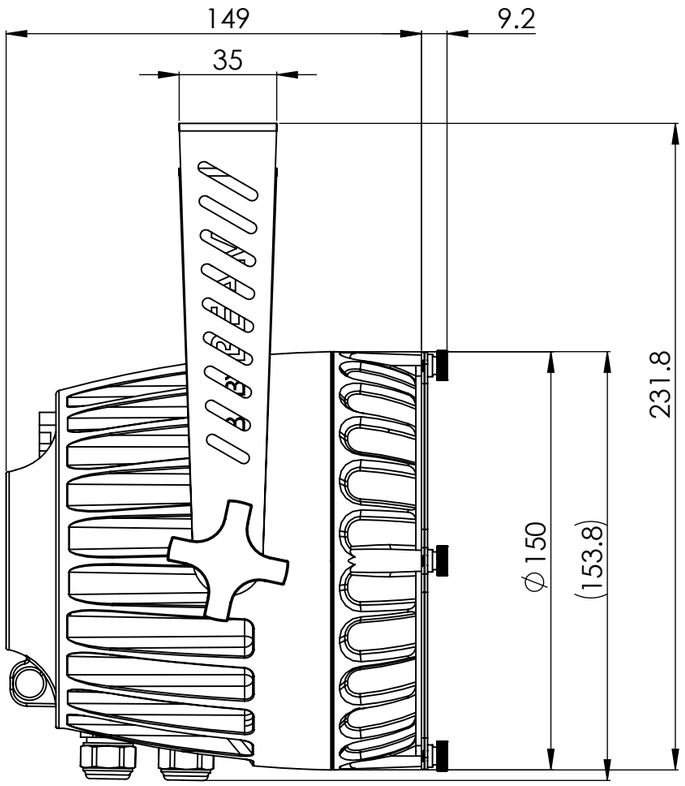

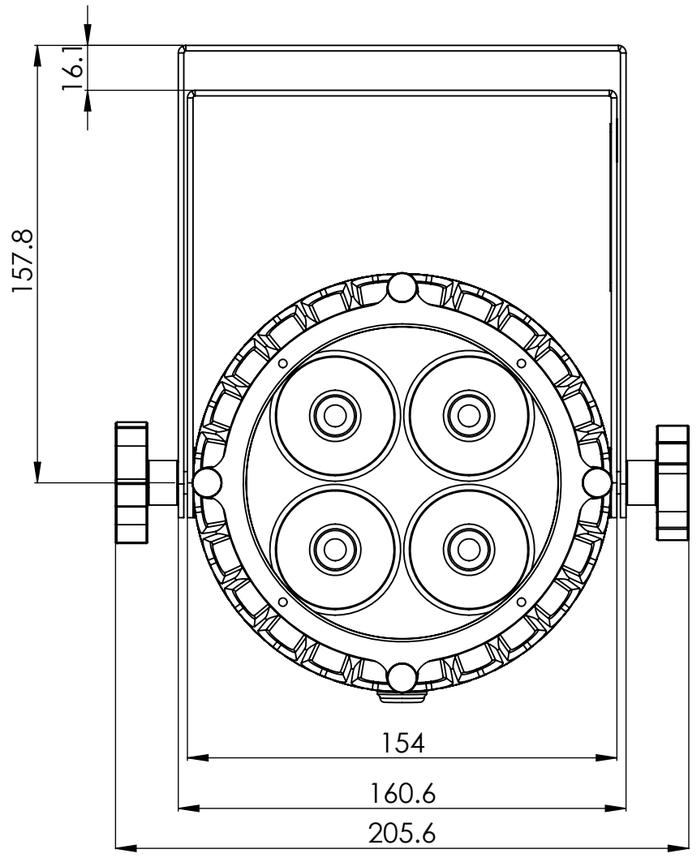

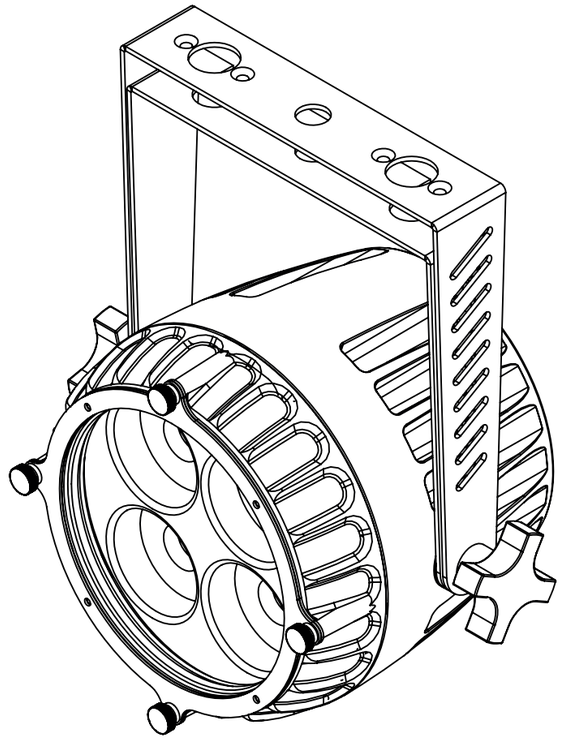

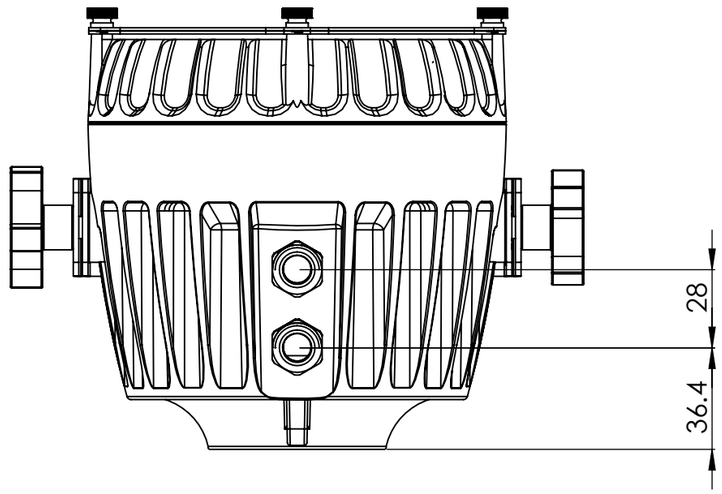

BABYBEAM4 | EHRGEIZ